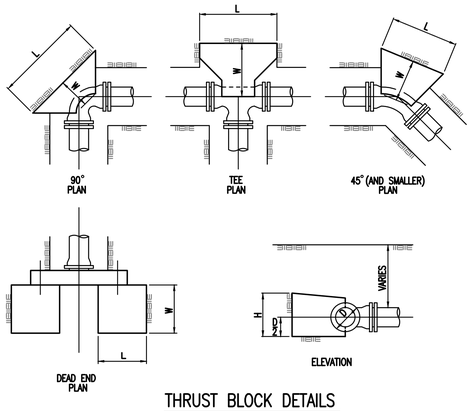

THRUST BLOCK DETAILS

THRUST BLOCK SCHEDULE				
LINE SIZE	FITTINGS & ANGLE	DIM. L	DIM. W	DIM. H
8"	45°	2'-6"	2'-6"	2'-0"
8"	90°	3'-6"	2'-6"	2'-6"
8" x 4"	Tee	1'-6"	1'-0"	1'-6"
8" x 6"	Tee	2'-6"	2'-0"	2'-6"
8" x 8"	Tee	2'-6"	2'-0"	2'-6"

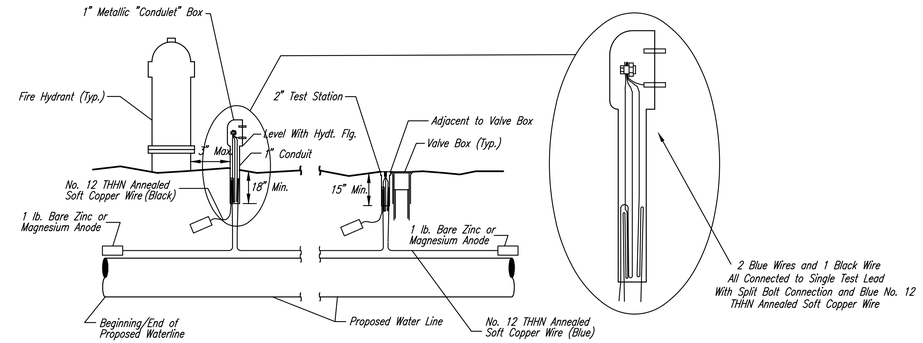

TRACER WIRE
Conductive type pipe locator/tracer wire shall be installed to locate all waterline pipe regardless of pipe material. The wire shall extend the entire length of the proposed pipe. The wire shall be taped to the waterline and pulled with the pipe. Split-bolt connectors shall be used at splice locations. Electrical tape shall cover all splices so no bare wire is exposed. Test stations shall be installed adjacent to all fire hydrants along the waterline and at blowoffs or valves near the ends of the waterlines. Any exceptions to the location of test stations shall be approved by the Construction Manager. At each test station, the tracer wire shall be connected to a 1 lb. Zinc or magnesium anode. Anodes shall also be attached to the tracer wire at both the beginning and the end of the proposed waterline. A typical layout of the tracer wire and test station is provided in the above figure.

WIRE
The tracer wire shall be Blue No. 12 THHN annealed soft copper wire with thermal plastic insulation. The insulation shall be heat, oil, and gasoline resistant as manufactured by Temple Electric or approved equal. To allow for grade adjustment, a minimum of 12" of excess wire shall be coiled at the bottom of the test station for all wires. The insulation sheathing shall be removed such that 1" bare copper wire is exposed at all points of connection. Contractor shall attach wire being installed with proposed water main to any tracer wire installed with adjacent waterline projects.

TEST STATIONS
The test station for fire hydrant applications shall be a 1 inch galvanized "condulet" style test station as manufactured by AGRA Industries with a removable solid cover having two leads extending from the face or approved equal. The test station for valve applications shall be 2 inch flush style test station T2PSJB as manufactured by HANDLEY Industries or approved equal. The "condulet" style test station shall be attached to a 1 inch rigid galvanized conduit with a minimum length of 36" and plastic end bushing. The flush style shall have the word "WATER" stamped or molded into the lid. All test stations shall be manufactured using molded blue tops or sufficiently coated with blue enamel paint. The tracer wire and the anode wire shall be installed to allow 10 inches of wire within the test station. In concrete environments such as sidewalks or in the downtown area the contractor shall use the flush style test station. The location of all test stations shall be approved by the Construction Manager, recorded, and shown in the as-built drawings.

ANODES
The anodes shall be 1 lb. bare zinc or magnesium. The anodes shall be buried at the same elevation as the waterline at each test station. The anodes shall be connected to Black No. 12 THHN annealed soft copper wire which shall be extended to the test station.

TRACER WIRE DETAIL

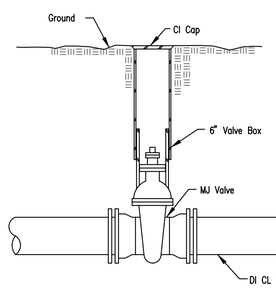

MATERIALS LIST
1 – MJ Gate Valve
2 LF – DI CL SJ Pipe
1 – 6" Valve Box

VALVE ASSEMBLY
*See Plans for size of valve.

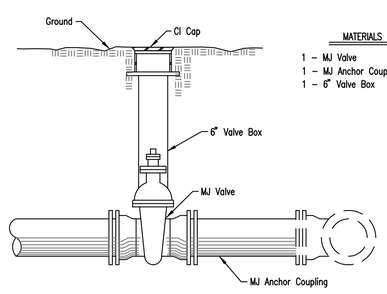

MATERIALS LIST
1 – MJ Valve
1 – MJ Anchor Coupling (12" or smaller)
1 – 6" Valve Box

ANCHORED VALVE ASSEMBLY

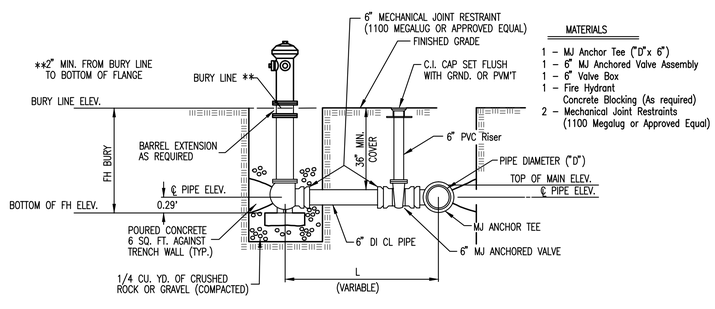

MATERIALS
1 – MJ Anchor Tee ("D"x 6")
1 – 6" MJ Anchored Valve Assembly
1 – 6" Valve Box
1 – Fire Hydrant
Concrete Blocking (As required)
2 – Mechanical Joint Restraints
(1100 Megalug or Approved Equal)

FIRE HYDRANT ASSEMBLY
NOTE: ALL BLOCKING TO BE POURED CONCRETE CLASS II

FIRE HYDRANT SCHEDULE				
LINE NO.	LOCATION	BURY LINE ELEVATION	TOP OF PIPE ELEVATION	FIRE HYDRANT BURY REQUIRED
1	13+16.09	977.6	972.22	6.0
3	32+09.14	979.0	974.17	5.5

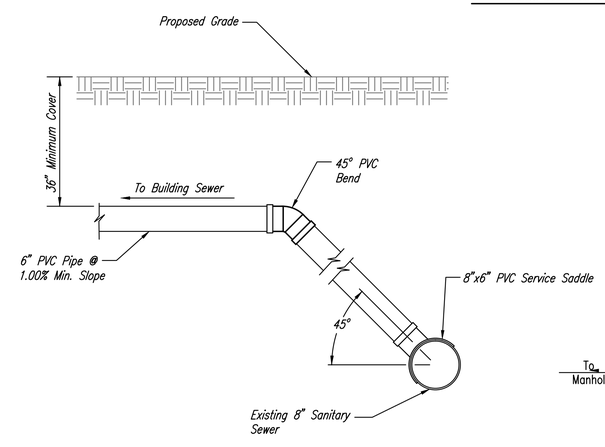

SANITARY SEWER SERVICE CONNECTION DETAIL

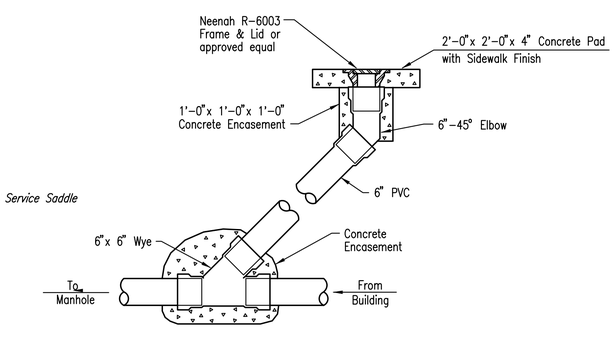

6" CLEANOUT DETAIL

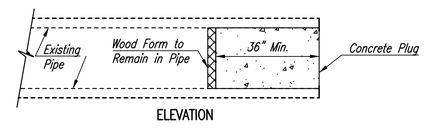

PIPE PLUGGING DETAIL
N.T.S.

NOTE: DRAWINGS AND SPECIFICATIONS ARE ORGANIZED FOR CONVENIENCE OF REFERENCE ONLY. THIS ORGANIZATION IS NOT INTENDED TO ESTABLISH THE SCOPE OF WORK OF ANY TRADE. THE WORK OF ANY GIVEN TRADE, SUPPLIER OR SUBCONTRACTOR MAY BE REPRESENTED IN DRAWINGS OR SPECIFICATION SECTIONS THAT CROSS OVER BETWEEN DESIGN DISCIPLINES AND MAY BE SHOWN ON OTHER DRAWINGS OR IN OTHER SPECIFICATION SECTIONS WITHIN THE CONTRACT DOCUMENTS. ESTABLISHING THE SCOPE OF ANY TRADE OR SUPPLIER IS THE RESPONSIBILITY OF THE CONTRACTOR. NEITHER THE OWNER NOR ARCHITECT WILL ESTABLISH THE LIMITS OR JURISDICTION OF ANY SUBCONTRACTOR.

GLMV Architecture
9229 Ward Parkway, Ste. 210
Kansas City, MO 64114
Tel: (816) 444-4200
www.glmv.com

PEC
PROFESSIONAL ENGINEERING CONSULTANTS, P.A.
104 SOUTH PINE PITTSBURG, KS 66762
620-235-0195 www.pec1.com
STATE CERT. OF AUTHORITY NO. 000465
PEC PROJECT # 14E14-000

STATE OF MISSOURI
BRIAN COOMES
NUMBER PE-2015029306
PROFESSIONAL ENGINEER
02/12/2016

CONSTRUCTION DOCUMENTS

© 2016 GLMV Architecture, Inc.
All work herein is the exclusive property of GLMV Architecture, Inc. and is not to be copied or used in any way without the express written consent of GLMV Architecture, Inc. All drawings, specification, ideas, designs and arrangements appearing herein constitute the original and unpublished Work of: GLMV Architecture, Inc.

JOPLIN PUBLIC SAFETY TRAINING FACILITY
5102 SWEDE LANE, JOPLIN, MO

MARK	DATE	DESCRIPTION

WATER LINE/SANITARY SEWER DETAILS

JOB NO.	13061.000
DATE	02-12-2016
DRAWN	BMC
CHECKED	BDR

C115
DWG. 20 OF 141

CONSTRUCTION DOCUMENTS

Saved: 01-25-2016 3:00:50 PM by BMC
Plot Scale: 1:1 02-12-2016 10:18:27 AM by BRIAN COOMES
U:\Pittsburg\20141\14E14\000\Main\Drawings\Plan Set\14E14-000_C-115_ Water Line Details